EC MOTION

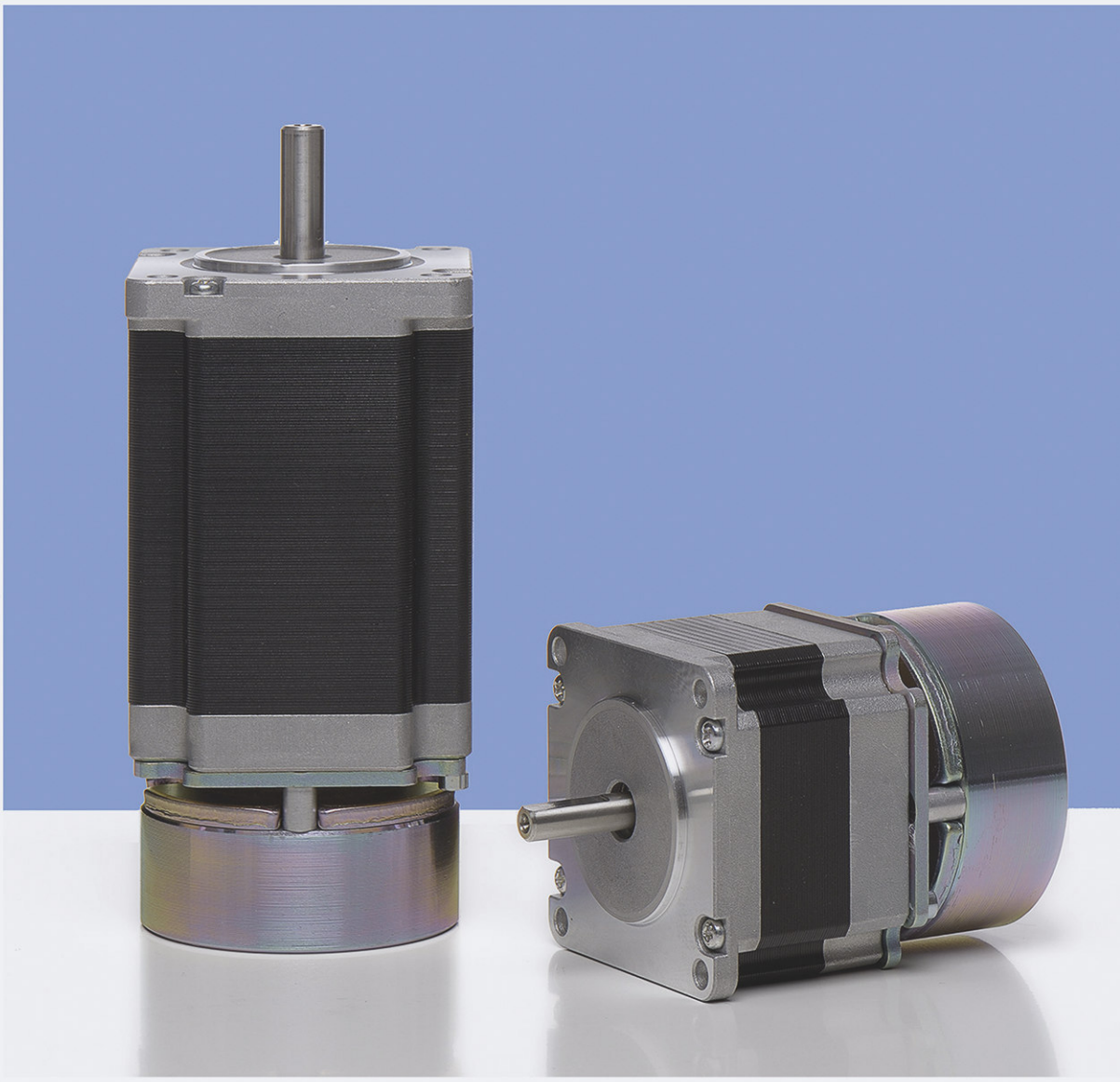

STEPPING MOTORS

2-Phase Step Motor with electromagnetic Brake

SCHRITTMOTOREN

2-Phasen Schrittmotoren mit elektromagnetischer Bremse

Bremse BRK26S - Technische Daten

Spannung:	24 VDC
Leistung:	9.5 W
Bremsmoment:	3.3 Nm
Spulenwiderstand:	47.3 up to 55.8 Ohm
Einschaltdauer:	50%
Gewicht:	0.45 kg

Schrittmotor - Technische Daten

Länge (L):

SECM264...B = 39 mm
SECM266...B = 54 mm
SECM268...B = 76 mm

SECM264M...B = 39 mm
SECM266M...B = 54 mm
SECM268M...B = 76 mm

Haltemoment:

SECM264...B = 0.50 Nm
SECM266...B = 1.17 Nm
SECM268...B = 1.75 Nm

SECM264M...B = 0.55 Nm
SECM266M...B = 1.25 Nm
SECM268M...B = 1.95 Nm

weitere Daten siehe Schrittmotordatenblatt

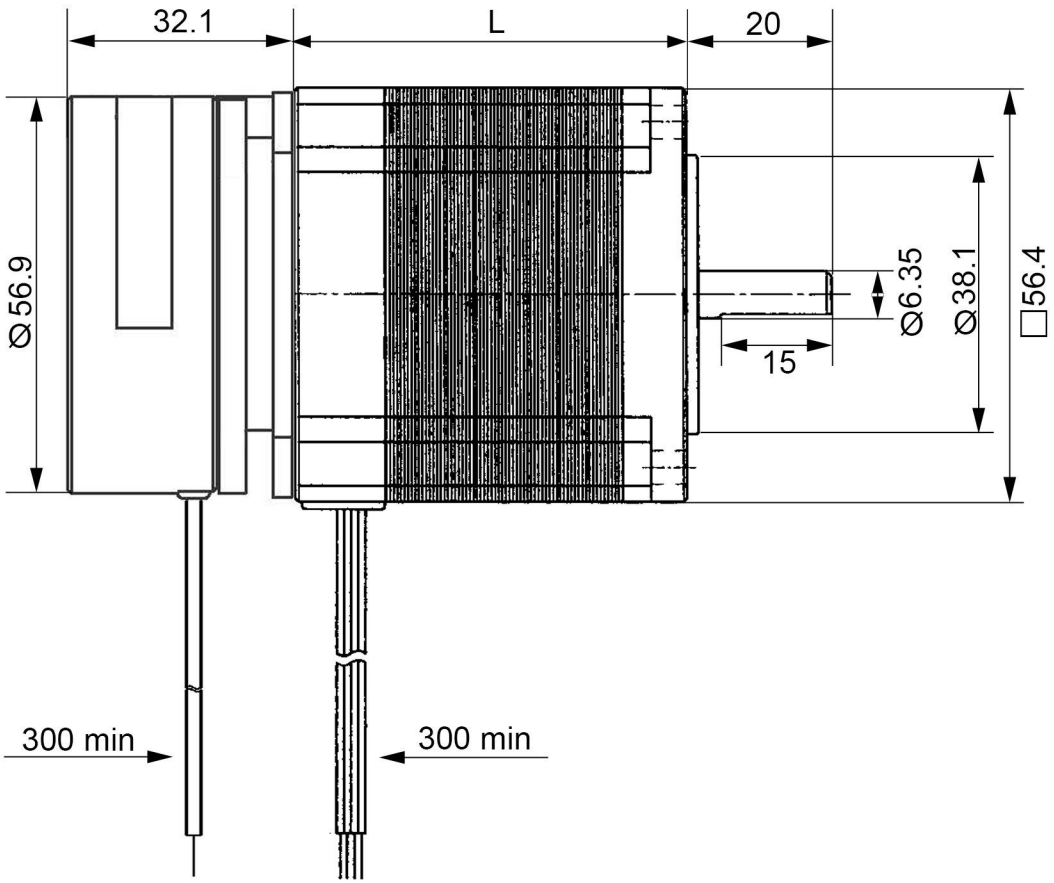

EC MOTION
Glockensprung (neu) 8
41812 Erkelenz
Tel.: +49-2431-94206-0
www.ec-motion.de - info@ec-motion.de

SECM26-Serie

Schrittmotoren mit elektromagnetischer Bremse

☐ 56.4 mm SECM-SPECIFICATIONS

1.8° HIGH-TORQUE 2 PHASE STEPPING MOTOR

Model A = Single Shaft B = Double Shaft	● Bipolar Parallel				● Bipolar Serial				● Unipolar				Torque Speed-curve
	Holding Torque [Nm]	Current/ Phase [A]	Resistance/ Phase [Ohm]	Inductance/ Phase [mH]	Holding Torque [Nm]	Current/ Phase [A]	Resistance/ Phase [Ohm]	Inductance/ Phase [mH]	Holding Torque [Nm]	Current/ Phase [A]	Resistance/ Phase [Ohm]	Inductance/ Phase [mH]	
SECM264-E1.0 (A/B)	0.50	1.4	2.6	5.4	0.50	0.7	10.4	21.6	0.39	1.0	5.2	5.4	E1
SECM264-E2.0 (A/B)	0.50	2.8	0.7	1.4	0.50	1.4	2.8	5.6	0.39	2.0	1.4	1.4	E2
SECM264-E3.0 (A/B)	0.50	4.2	0.3*	0.5	0.50	2.1	1.2*	2.0	0.39	3.0	0.6*	0.5	E2

Number of Leads	Weight of Motor	Size Lenght	Rotor Inertia
8	0.45 kg	56.4 x 56.4 x 39 mm	120 x 10^{-7} kgm²

Resistance / Phase (Ω) = ± 10%, (* ± 15%), Inductance / Phase (mH) = ± 20%

Model A = Single Shaft B = Double Shaft	● Bipolar Parallel				● Bipolar Serial				● Unipolar				Torque Speed-curve
	Holding Torque [Nm]	Current/ Phase [A]	Resistance/ Phase [Ohm]	Inductance/ Phase [mH]	Holding Torque [Nm]	Current/ Phase [A]	Resistance/ Phase [Ohm]	Inductance/ Phase [mH]	Holding Torque [Nm]	Current/ Phase [A]	Resistance/ Phase [Ohm]	Inductance/ Phase [mH]	
SECM266-E1.0 (A/B)	1.17	1.4	3.6	11.0	1.17	0.7	14.4	44.0	0.90	1.0	7.2	11.0	F1
SECM266-E2.0 (A/B)	1.17	2.8	0.9	2.5	1.17	1.4	3.6	10.0	0.90	2.0	1.8	2.5	F2
SECM266-E3.0 (A/B)	1.17	4.2	0.4*	1.2	1.17	2.1	1.6*	4.8	0.90	3.0	0.8*	1.2	F3

Number of Leads	Weight of Motor	Size Lenght	Rotor Inertia
8	0.7 kg	56.4 x 56.4 x 54 mm	260 x 10^{-7} kgm²

Resistance / Phase (Ω) = ± 10%, (* ± 15%), Inductance / Phase (mH) = ± 20%

Model A = Single Shaft B = Double Shaft	● Bipolar Parallel				● Bipolar Serial				● Unipolar				Torque Speed-curve
	Holding Torque [Nm]	Current/ Phase [A]	Resistance/ Phase [Ohm]	Inductance/ Phase [mH]	Holding Torque [Nm]	Current/ Phase [A]	Resistance/ Phase [Ohm]	Inductance/ Phase [mH]	Holding Torque [Nm]	Current/ Phase [A]	Resistance/ Phase [Ohm]	Inductance/ Phase [mH]	
SECM268-E1.0 (A/B)	1.75	1.4	4.1	14.0	1.75	0.7	16.4	56.0	1.35	1.0	8.2	14.0	G1
SECM268-E2.0 (A/B)	1.75	2.8	1.2	3.6	1.75	1.4	4.6	14.4	1.35	2.0	2.3	3.6	G2
SECM268-E2.3 (A/B)	1.75	3.3	0.9	2.8	1.75	1.65	3.4	11.2	1.35	2.3	1.7	2.8	G3
SECM268-E3.0 (A/B)	1.75	4.2	0.5*	1.6	1.75	2.1	2.0*	6.4	1.35	3.0	1.0*	1.6	G4

Number of Leads	Weight of Motor	Size Lenght	Rotor Inertia
8	1.0 kg	56.4 x 56.4 x 76 mm	430 x 10^{-7} kgm²

Resistance / Phase (Ω) = ± 10%, (* ± 15%), Inductance / Phase (mH) = ± 20%

HECM / SECM - Series

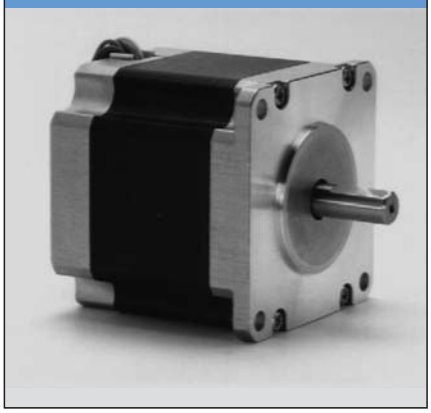

GENERAL SPECIFICATIONS

Items	Specifications
Shaft Runout	0.05 mm Max. T.I.R.
Shaft Radial Play	0.025 mm Max. (0.5 kg)
Shaft Axial Play	0.075 mm Max. (1 kg)
Insulation Resistance	100 M Ω (DC 500 V)
Dielectric Strength	500 V AC (1 Minute)
Insulation Class	CLASS B (130°)
Temperature Rise	80° C MAX. (2 PHASE ON)
Working Temperature	-20° C ~ + 50° C

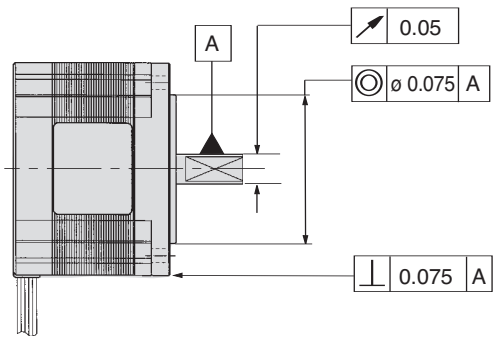

TORQUE VS. SPEED CHARACTERISTIC

Nm/KPPS (1000 PULSE/SECOND)

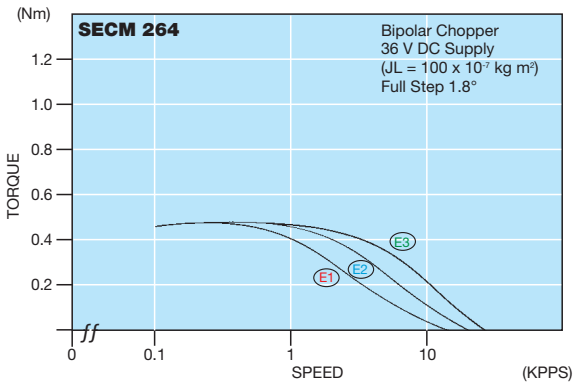

DIMENSIONS

UNIT = mm

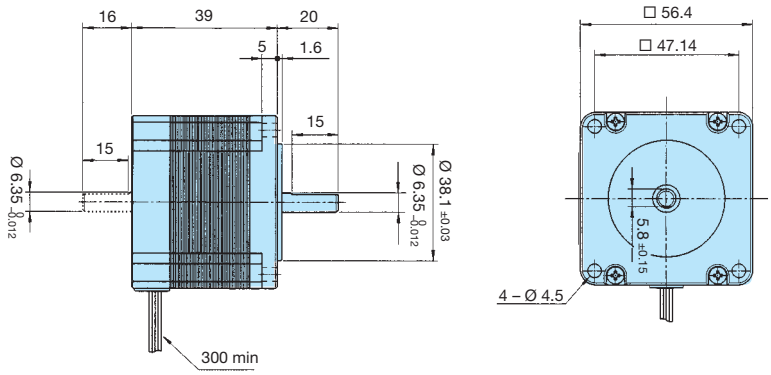

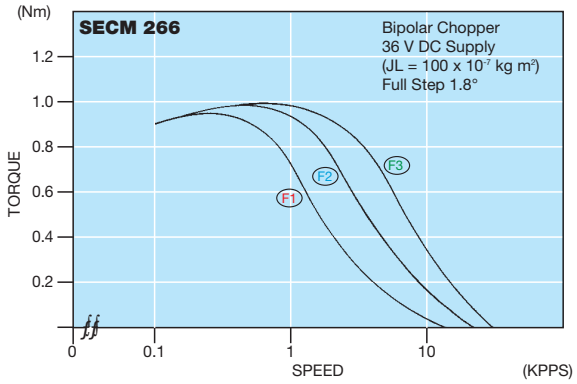

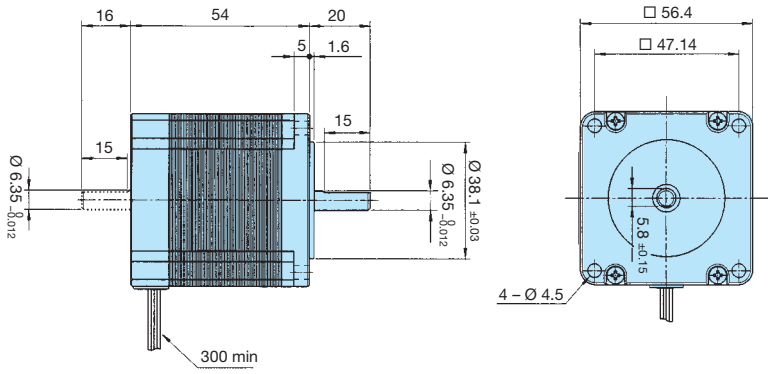

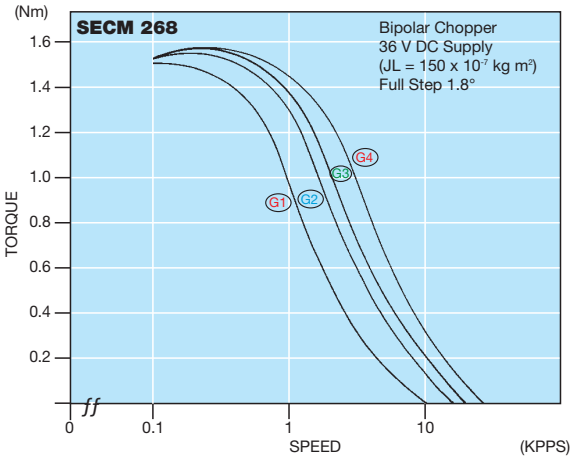

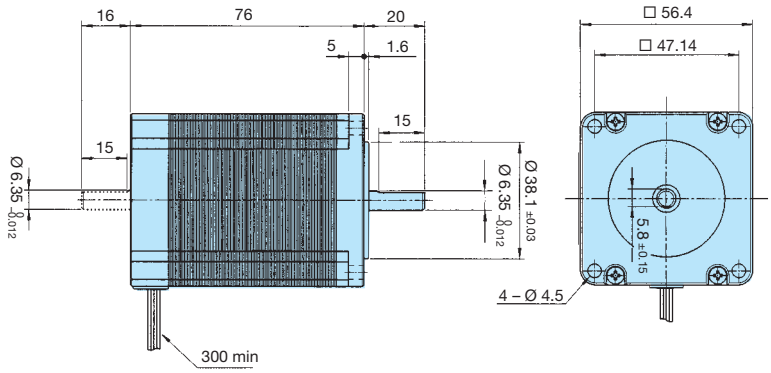

COLOR OF LEAD WIRES

Bipolar (Parallel)

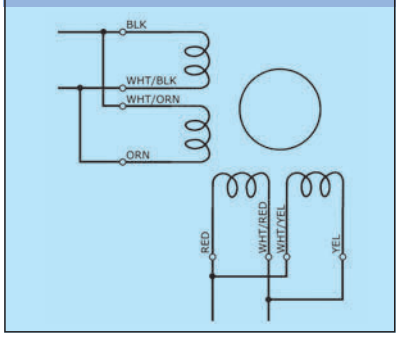

Bipolar (Series)

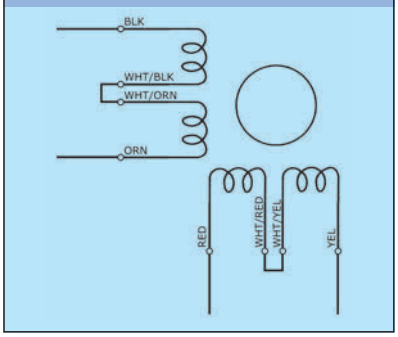

Unipolar

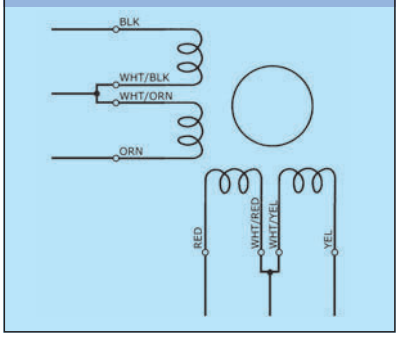

☐ 56.4 mm SECM-SPECIFICATIONS

0.9° HIGH-TORQUE 2 PHASE STEPPING MOTOR

Model A = Single Shaft B = Double Shaft	● Bipolar Parallel				● Bipolar Serial				● Unipolar				Torque Speed-curve
	Holding Torque [Nm]	Current/ Phase [A]	Resistance/ Phase [Ohm]	Inductance/ Phase [mH]	Holding Torque [Nm]	Current/ Phase [A]	Resistance/ Phase [Ohm]	Inductance/ Phase [mH]	Holding Torque [Nm]	Current/ Phase [A]	Resistance/ Phase [Ohm]	Inductance/ Phase [mH]	
SECM264M-E1.0 (A/B)	0.55	1.4	2.8	8.4	0.55	0.7	11.2	33.6	0.44	1.0	5.6	8.4	N1
SECM264M-E2.0 (A/B)	0.55	2.8	0.7	2.2	0.55	1.4	2.8	8.8	0.44	2.0	1.4	2.2	N2
SECM264M-E3.0 (A/B)	0.55	4.2	0.3*	0.9	0.55	2.1	1.2*	3.6	0.44	3.0	0.6*	0.9	N3

Number of Leads	Weight of Motor	Size Lenght	Rotor Inertia
8	0.45 kg	56.4 x 56.4 x 39 mm	145 x 10^{-7} kgm²

Resistance / Phase (Ω) = ± 10%, (* ± 15%), Inductance / Phase (mH) = ± 20%

Model A = Single Shaft B = Double Shaft	● Bipolar Parallel				● Bipolar Serial				● Unipolar				Torque Speed-curve
	Holding Torque [Nm]	Current/ Phase [A]	Resistance/ Phase [Ohm]	Inductance/ Phase [mH]	Holding Torque [Nm]	Current/ Phase [A]	Resistance/ Phase [Ohm]	Inductance/ Phase [mH]	Holding Torque [Nm]	Current/ Phase [A]	Resistance/ Phase [Ohm]	Inductance/ Phase [mH]	
SECM266M-E1.0 (A/B)	1.25	1.4	3.6	23.1	1.25	0.7	14.4	92.4	0.95	1.0	7.2	23.1	O1
SECM266M-E2.0 (A/B)	1.25	2.8	0.9	5.9	1.25	1.4	3.6	23.6	0.95	2.0	1.8	5.9	O2
SECM266M-E3.0 (A/B)	1.25	4.2	0.4*	2.6	1.25	2.1	1.6*	10.4	0.95	3.0	0.8*	2.6	O3

Number of Leads	Weight of Motor	Size Lenght	Rotor Inertia
8	0.7 kg	56.4 x 56.4 x 54 mm	310 x 10^{-7} kgm²

Resistance / Phase (Ω) = ± 10%, (* ± 15%), Inductance / Phase (mH) = ± 20%

Model A = Single Shaft B = Double Shaft	● Bipolar Parallel				● Bipolar Serial				● Unipolar				Torque Speed-curve
	Holding Torque [Nm]	Current/ Phase [A]	Resistance/ Phase [Ohm]	Inductance/ Phase [mH]	Holding Torque [Nm]	Current/ Phase [A]	Resistance/ Phase [Ohm]	Inductance/ Phase [mH]	Holding Torque [Nm]	Current/ Phase [A]	Resistance/ Phase [Ohm]	Inductance/ Phase [mH]	
SECM268M-E2.0 (A/B)	1.95	2.8	1.15	7.8	1.95	1.4	4.6	31.2	1.45	2.0	2.3	7.8	P1
SECM268M-E2.4 (A/B)	1.95	3.5	0.75	5.0	1.95	1.75	3.0	20.0	1.45	2.45	1.5	5.0	P2
SECM268M-E3.0 (A/B)	1.95	4.2	0.5*	3.5	1.95	2.1	2.0*	14.0	1.45	3.0	1.0*	3.5	P3

Number of Leads	Weight of Motor	Size Lenght	Rotor Inertia
8	1.0 kg	56.4 x 56.4 x 76 mm	520 x 10^{-7} kgm²

Resistance / Phase (Ω) = ± 10%, (* ± 15%), Inductance / Phase (mH) = ± 20%

SECM 26... Series 0.9°

GENERAL SPECIFICATIONS

Items	Specifications
Shaft Runout	0.05 mm Max. T.I.R.
Shaft Radial Play	0.025 mm Max. (0.5 kg)
Shaft Axial Play	0.075 mm Max. (1 kg)
Insulation Resistance	100 M Ω (DC 500 V)
Dielectric Strength	500 V AC (1 Minute)
Insulation Class	CLASS B (130°)
Temperature Rise	80° C MAX. (2 PHASE ON)
Working Temperature	-20° C ~ + 50° C

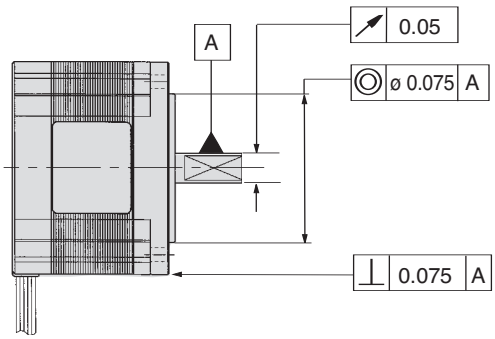

TORQUE VS. SPEED CHARACTERISTIC

Nm/KPPS (1000 PULSE/SECOND)

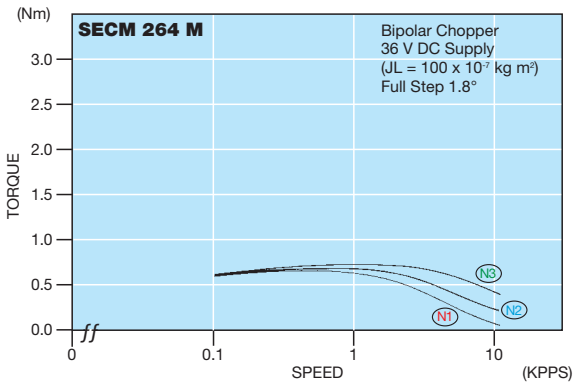

DIMENSIONS

UNIT = mm

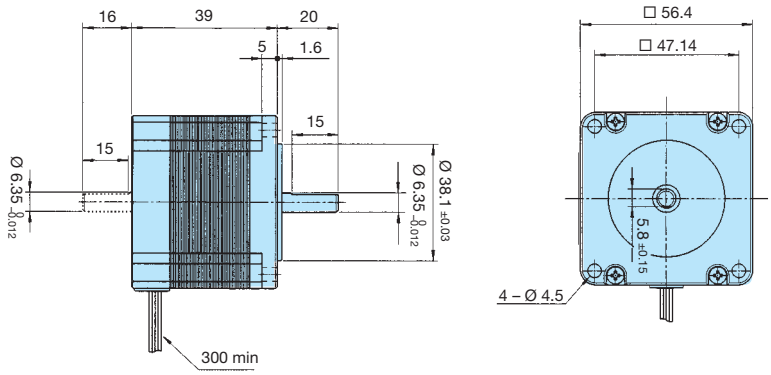

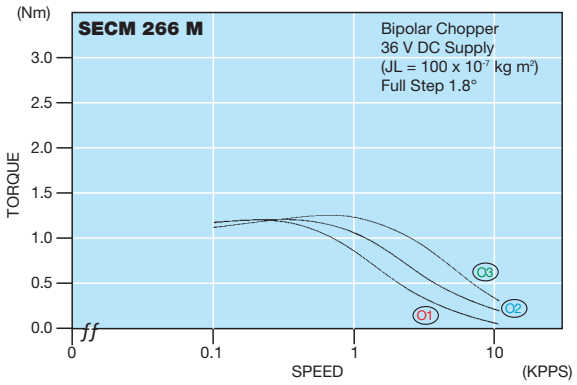

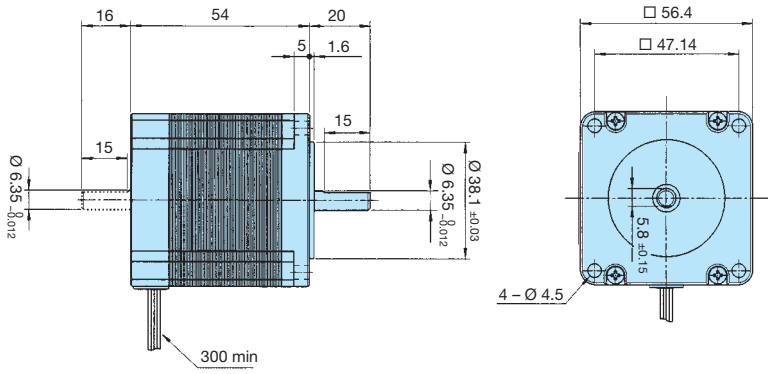

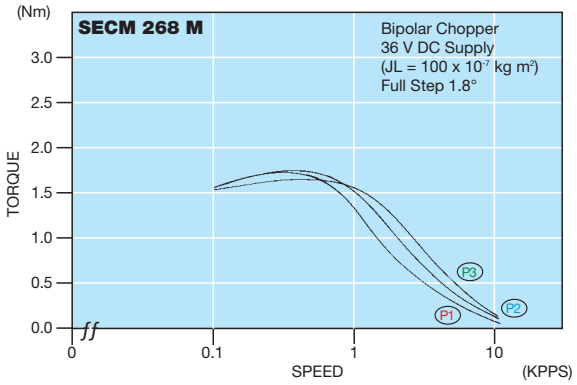

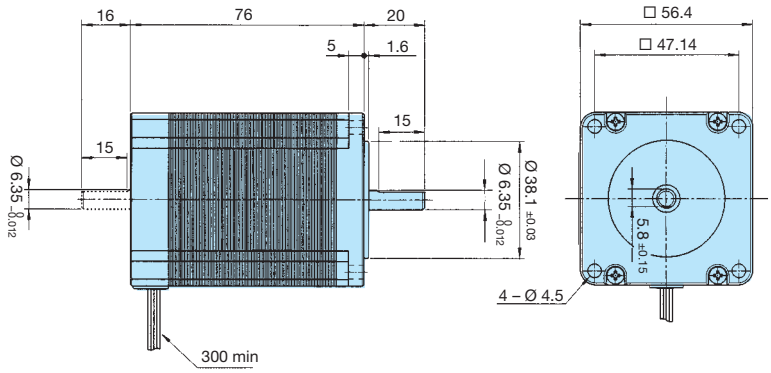

COLOR OF LEAD WIRES

Bipolar (Parallel)

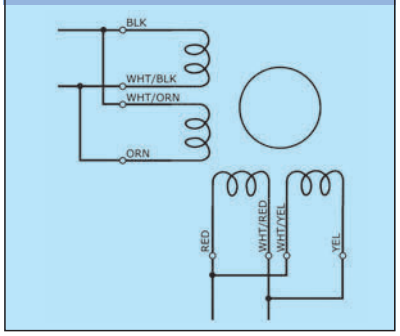

Bipolar (Series)

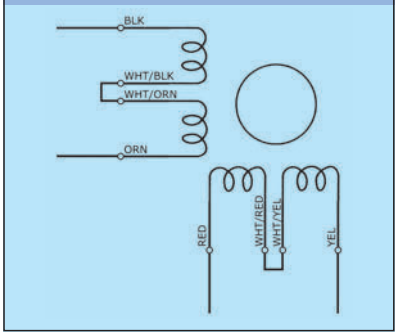

Unipolar

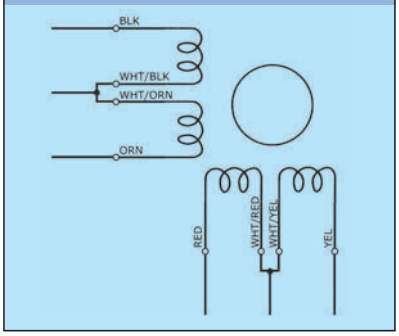

Bremse BRK26H - Technische Daten

Spannung:	24 VDC
Leistung:	9.5 W
Bremsmoment:	3.3 Nm
Spulenwiderstand:	47.3 up to 55.8 Ohm
Einschaltdauer:	50%
Gewicht:	0.45 kg

Schrittmotor - Technische Daten

Länge (L):

HECM264...B = 43.5 mm
HECM266...B = 54 mm
HECM267...B = 65 mm
HECM269...B = 85 mm

Haltemoment:

HECM264...B = 1.15 Nm
HECM266...B = 1.82 Nm
HECM267...B = 2.35 Nm
HECM269...B = 3.30 Nm

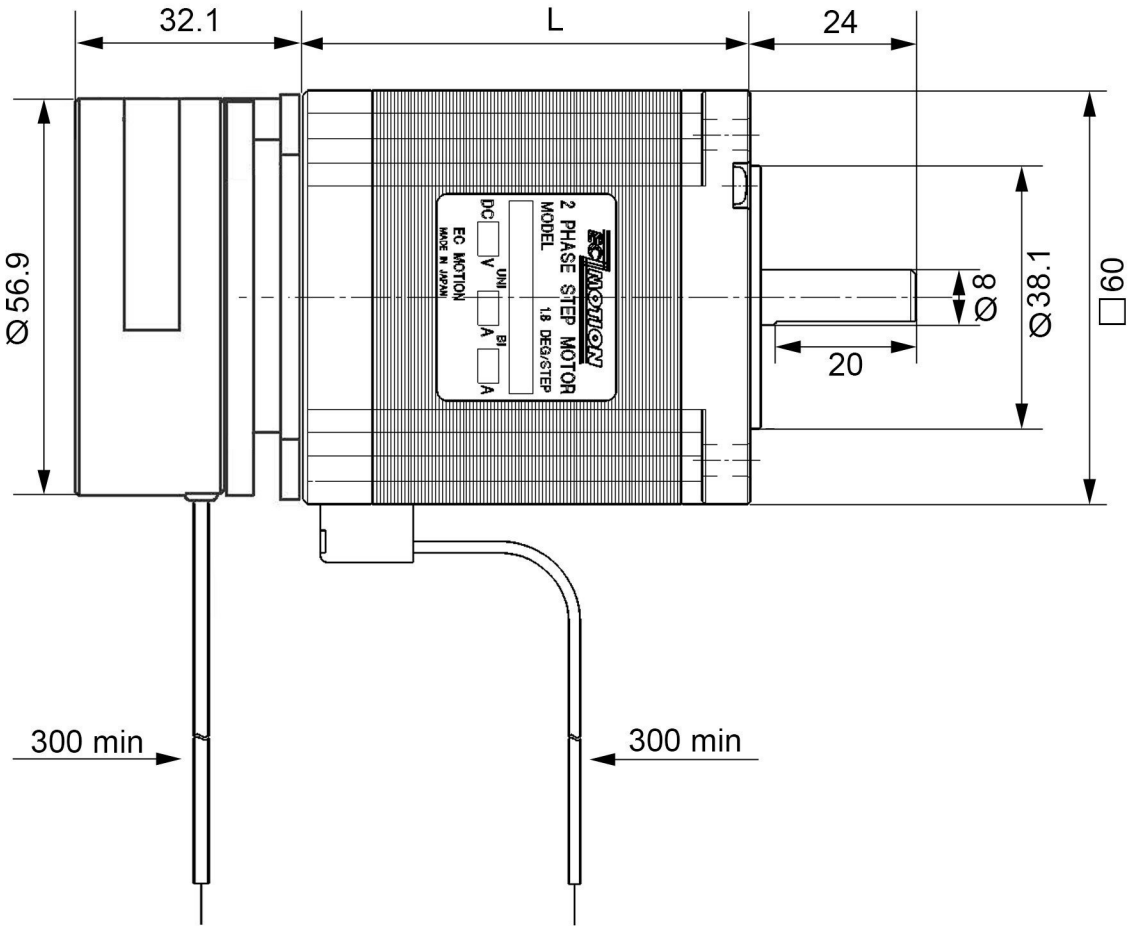

weitere Daten siehe Schrittmotordatenblatt

EC MOTION
Glockensprung (neu) 8
41812 Erkelenz
Tel.: +49-2431-94206-0
www.ec-motion.de - info@ec-motion.de

HECM26-Serie

Schrittmotoren mit elektromagnetischer Bremse

☐ 60 mm HECM-SPECIFICATIONS

1.8° HIGH-TORQUE 2 PHASE STEPPING MOTOR

Model A = Single Shaft B = Double Shaft	● Bipolar Parallel				● Bipolar Serial				● Unipolar				Torque Speed-curve
	Holding Torque [Nm]	Current/ Phase [A]	Resistance/ Phase [Ohm]	Inductance/ Phase [mH]	Holding Torque [Nm]	Current/ Phase [A]	Resistance/ Phase [Ohm]	Inductance/ Phase [mH]	Holding Torque [Nm]	Current/ Phase [A]	Resistance/ Phase [Ohm]	Inductance/ Phase [mH]	
HECM264-E2.0 (A/B)	1.15	2.8	0.73	2.1	1.15	1.4	2.9	8.4	0.85	2.0	1.45	2.1	A1
HECM264-E3.0 (A/B)	1.15	4.2	0.33*	1.0	1.15	2.1	1.3*	4.0	0.85	3.0	0.65*	1.0	A2

Number of Leads	Weight of Motor	Size Lenght	Rotor Inertia
8	0.6 kg	60 x 60 x 43,5 mm	280 x 10^{-7} kgm²

Resistance / Phase (Ω) = ± 10%, (* ± 15%), Inductance / Phase (mH) = ± 20%

Model A = Single Shaft B = Double Shaft	● Bipolar Parallel				● Bipolar Serial				● Unipolar				Torque Speed-curve
	Holding Torque [Nm]	Current/ Phase [A]	Resistance/ Phase [Ohm]	Inductance/ Phase [mH]	Holding Torque [Nm]	Current/ Phase [A]	Resistance/ Phase [Ohm]	Inductance/ Phase [mH]	Holding Torque [Nm]	Current/ Phase [A]	Resistance/ Phase [Ohm]	Inductance/ Phase [mH]	
HECM266-E2.0 (A/B)	1.82	2.8	1.0	3.8	1.82	1.4	4.0	15.2	1.35	2.0	2.0	3.8	B1
HECM266-E3.0 (A/B)	1.82	4.2	0.43*	1.6	1.82	2.1	1.7*	6.4	1.35	3.0	0.85*	1.6	B2

Number of Leads	Weight of Motor	Size Lenght	Rotor Inertia
8	0.85 kg	60 x 60 x 54 mm	450 x 10^{-7} kgm²

Resistance / Phase (Ω) = ± 10%, (* ± 15%), Inductance / Phase (mH) = ± 20%

Model A = Single Shaft B = Double Shaft	● Bipolar Parallel				● Bipolar Serial				● Unipolar				Torque Speed-curve
	Holding Torque [Nm]	Current/ Phase [A]	Resistance/ Phase [Ohm]	Inductance/ Phase [mH]	Holding Torque [Nm]	Current/ Phase [A]	Resistance/ Phase [Ohm]	Inductance/ Phase [mH]	Holding Torque [Nm]	Current/ Phase [A]	Resistance/ Phase [Ohm]	Inductance/ Phase [mH]	
HECM267-E2.4 (A/B)	2.35	3.5	0.75	3.1	2.35	1.75	3.0	12.4	1.75	2.45	1.5	3.1	C1
HECM267-E3.0 (A/B)	2.35	4.2	0.5*	2.0	2.35	2.1	2.0*	8.0	1.75	3.0	1.0*	2.0	C2

Number of Leads	Weight of Motor	Size Lenght	Rotor Inertia
8	1.1 kg	60 x 60 x 65 mm	570 x 10^{-7} kgm²

Resistance / Phase (Ω) = ± 10%, (* ± 15%), Inductance / Phase (mH) = ± 20%

Model A = Single Shaft B = Double Shaft	● Bipolar Parallel				● Bipolar Serial				● Unipolar				Torque Speed-curve
	Holding Torque [Nm]	Current/ Phase [A]	Resistance/ Phase [Ohm]	Inductance/ Phase [mH]	Holding Torque [Nm]	Current/ Phase [A]	Resistance/ Phase [Ohm]	Inductance/ Phase [mH]	Holding Torque [Nm]	Current/ Phase [A]	Resistance/ Phase [Ohm]	Inductance/ Phase [mH]	
HECM269-E2.4 (A/B)	3.30	3.5	1.0	5.0	3.30	1.75	4.0	20.0	2.45	2.45	2.0	5.0	D1
HECM269-E3.0 (A/B)	3.30	4.2	0.65*	3.2	3.30	2.1	2.6*	12.8	2.45	3.0	1.3*	3.2	D2

Number of Leads	Weight of Motor	Size Lenght	Rotor Inertia
8	1.45 kg	60 x 60 x 85 mm	900 x 10^{-7} kgm²

Resistance / Phase (Ω) = ± 10%, (* ± 15%), Inductance / Phase (mH) = ± 20%

TORQUE VS. SPEED CHARACTERISTIC

Nm/KPPS (1000 PULSE/SECOND)

DIMENSIONS

UNIT = mm

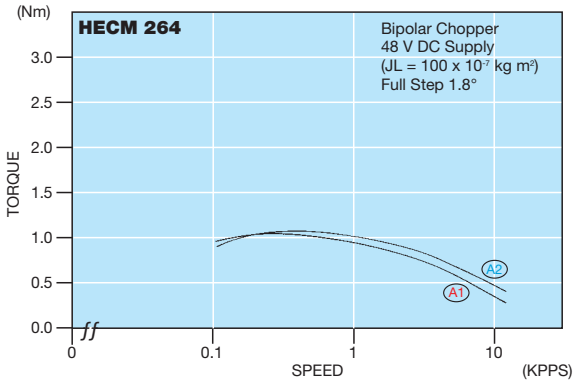

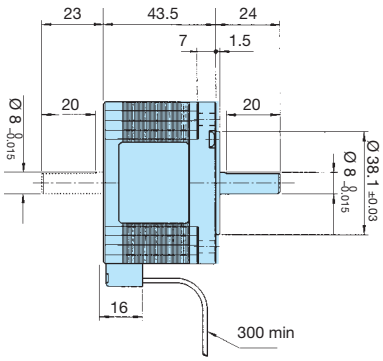

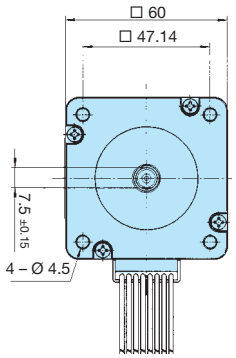

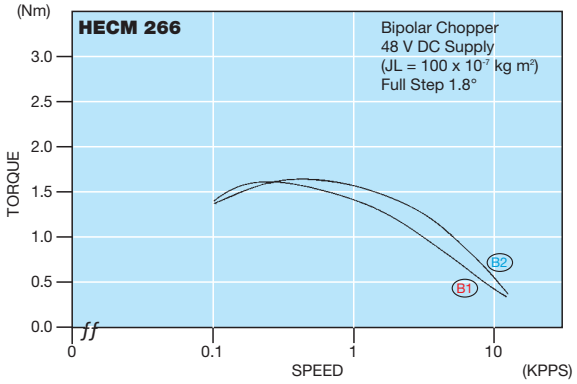

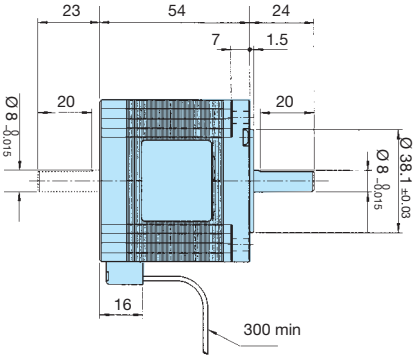

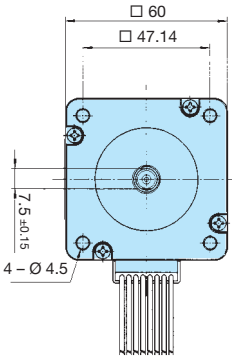

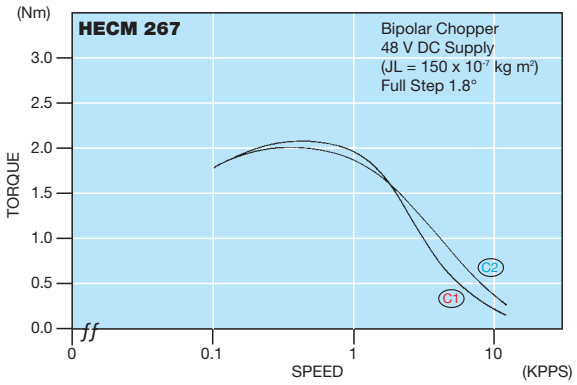

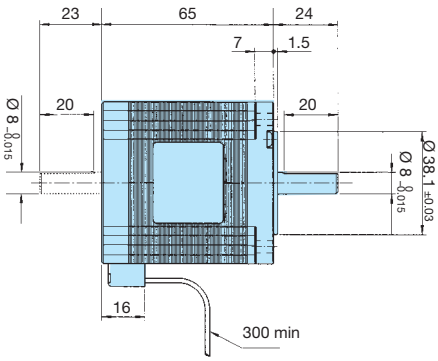

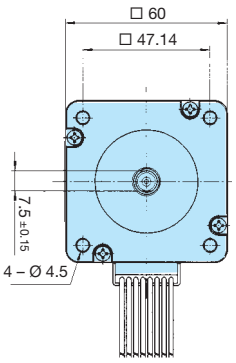

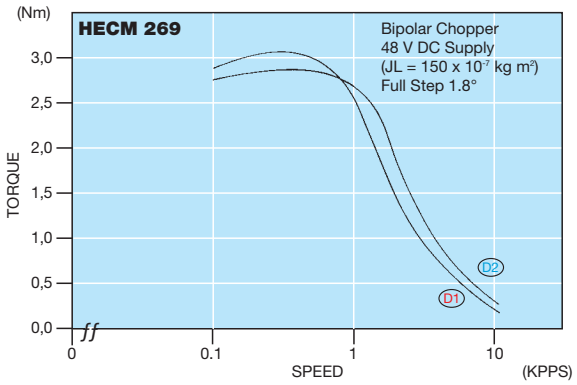

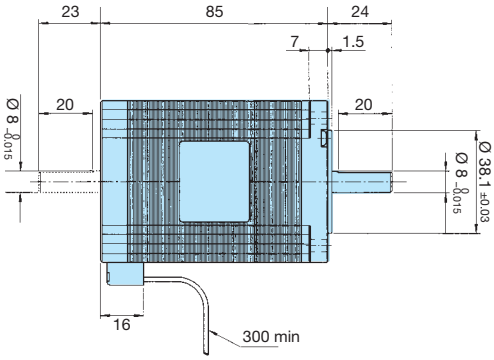

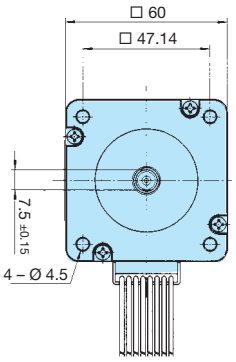

Bremse BRK29S - Technische Daten

Spannung:	24 VDC
Leistung:	23,1 W
Bremsmoment:	10,2 Nm
Spulenwiderstand:	24,9 Ohm ± 10%
Einschaltdauer:	100%
Gewicht:	0,918 kg

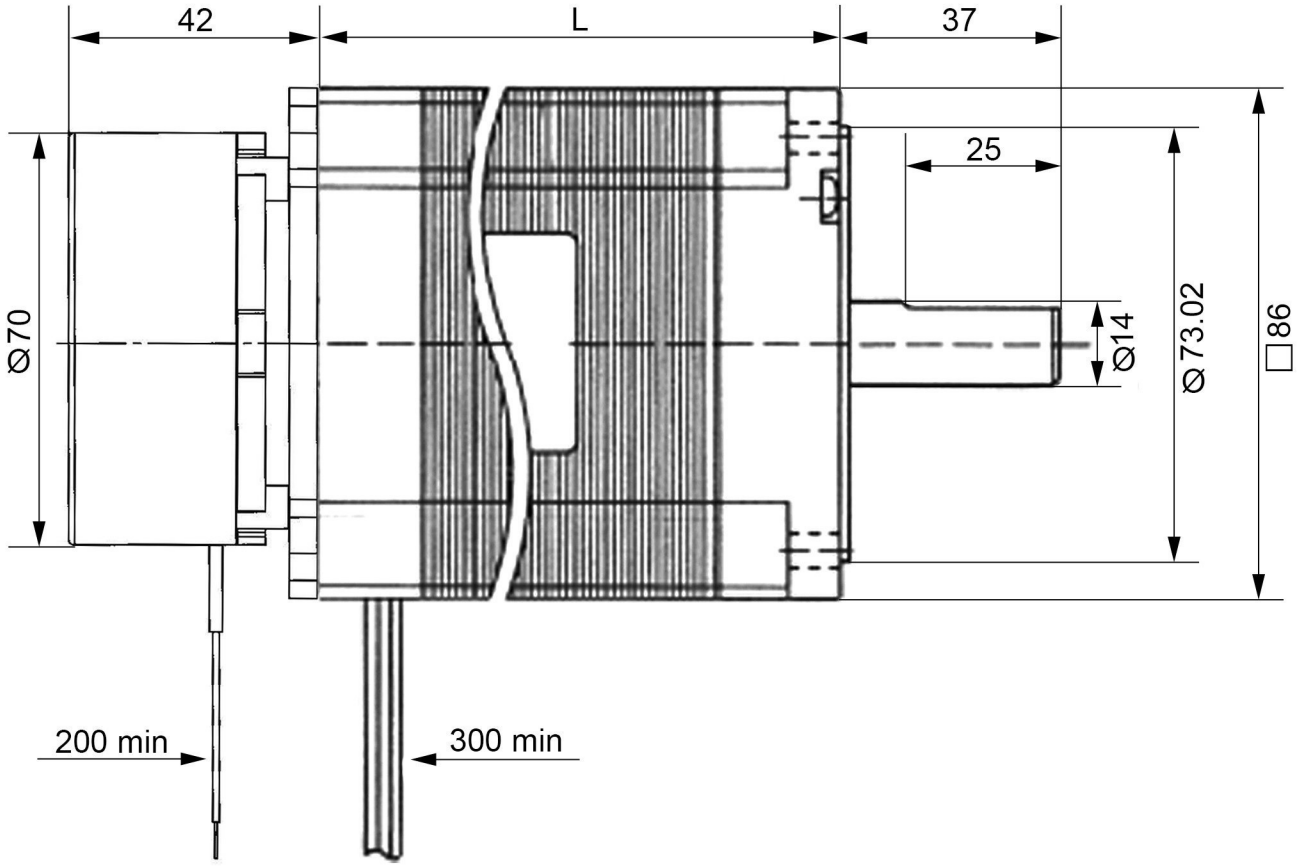

Schrittmotor - Technische Daten

Länge (L):

SECM296-E4.5BE = 79 mm
SECM299-E4.5BE = 117,5 mm
SECM299-E6.4BE = 117,5 mm
SECM2913-E4.0BE = 156 mm
SECM2913-E6.4BE = 156 mm

Haltemoment:

SECM296-E4.5BE = 3,7 Nm
SECM299-E4.5BE = 7,3 Nm
SECM299-E6.4BE = 6,9 Nm
SECM2913-E4.0BE = 10,2 Nm
SECM2913-E6.4BE = 9,8 Nm

weitere Daten siehe Schrittmotordatenblatt

EC MOTION
Glockensprung (neu) 8
41812 Erkelenz
Tel.: +49-2431-94206-0
www.ec-motion.de - info@ec-motion.de

SECM29-Serie

Schrittmotoren mit elektromagnetischer Bremse

☐ 86 mm SECM-SPECIFICATIONS

1.8° HIGH-TORQUE 2 PHASE STEPPING MOTOR

Model AE = Single Shaft BE = Double Shaft	● Bipolar Parallel				● Bipolar Serial				● Unipolar				Torque Speed-curve
	Holding Torque [Nm]	Current/ Phase [A]	Resistance/ Phase [Ohm]	Inductance/ Phase [mH]	Holding Torque [Nm]	Current/ Phase [A]	Resistance/ Phase [Ohm]	Inductance/ Phase [mH]	Holding Torque [Nm]	Current/ Phase [A]	Resistance/ Phase [Ohm]	Inductance/ Phase [mH]	
SECM296-E4.5 (AE/BE)	3.70	6.4	0.2	1.6	3.70	3.2	0.8	6.4	2.75	4.5	0.4	1.6	H1

Number of Leads	Weight of Motor	Size Lenght	Rotor Inertia
8	2.1 kg	86 x 86 x 79 mm	1600 x 10^{-7} kgm²

Resistance / Phase (Ω) = ± 15%, Inductance / Phase (mH) = ± 20%

Model AE = Single Shaft BE = Double Shaft	● Bipolar Parallel				● Bipolar Serial				● Unipolar				Torque Speed-curve
	Holding Torque [Nm]	Current/ Phase [A]	Resistance/ Phase [Ohm]	Inductance/ Phase [mH]	Holding Torque [Nm]	Current/ Phase [A]	Resistance/ Phase [Ohm]	Inductance/ Phase [mH]	Holding Torque [Nm]	Current/ Phase [A]	Resistance/ Phase [Ohm]	Inductance/ Phase [mH]	
SECM299-E4.5 (AE/BE)	7.30	6.4	0.3	3.1	7.30	3.2	1.2	12.4	5.40	4.5	0.6	3.1	I1
SECM299-E6.4 (AE/BE)	6.90	9.0	0.16*	1.1	6.90	4.5	0.64*	4.4	5.00	6.4	0.32*	1.1	I2

Number of Leads	Weight of Motor	Size Lenght	Rotor Inertia
8	3.5 kg	86 x 86 x 117.5 mm	3200 x 10^{-7} kgm²

Resistance / Phase (Ω) = ± 15%, (* ± 20%), Inductance / Phase (mH) = ± 20%

Model AE = Single Shaft BE = Double Shaft	● Bipolar Parallel				● Bipolar Serial				● Unipolar				Torque Speed-curve
	Holding Torque [Nm]	Current/ Phase [A]	Resistance/ Phase [Ohm]	Inductance/ Phase [mH]	Holding Torque [Nm]	Current/ Phase [A]	Resistance/ Phase [Ohm]	Inductance/ Phase [mH]	Holding Torque [Nm]	Current/ Phase [A]	Resistance/ Phase [Ohm]	Inductance/ Phase [mH]	
SECM2913-E4.0 (AE/BE)	10.20	5.7	0.43	4.6	10.20	2.8	1.7	18.4	7.40	4.0	0.85	4.6	J1
SECM2913-E6.4 (AE/BE)	9.80	9.0	0.19*	1.7	9.80	4.5	0.76*	6.8	7.20	6.4	0.38*	1.7	J2

Number of Leads	Weight of Motor	Size Lenght	Rotor Inertia
8	5.0 kg	86 x 86 x 156 mm	4800 x 10^{-7} kgm²

Resistance / Phase (Ω) = ± 15%, (* ± 20%), Inductance / Phase (mH) = ± 20%

SECM29... - Series

GENERAL SPECIFICATIONS

Items	Specifications
Shaft Runout	0.05 mm Max. T.I.R.
Shaft Radial Play	0.025 mm Max. (0.5 kg)
Shaft Axial Play	0.075 mm Max. (1 kg)
Insulation Resistance	100 M Ω (DC 500 V)
Dielectric Strength	500 V AC (1 Minute)
Insulation Class	CLASS B (130°)
Temperature Rise	80° C MAX. (2 PHASE ON)
Working Temperature	-20° C ~ + 50° C

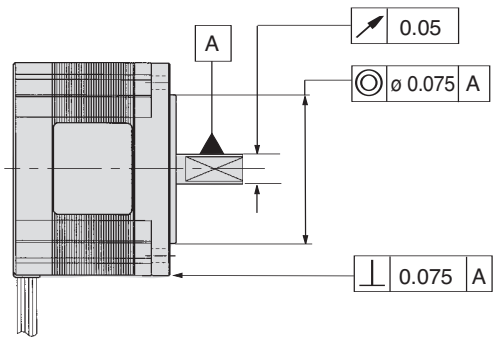

TORQUE VS. SPEED CHARACTERISTIC

Nm/KPPS (1000 PULSE/SECOND)

DIMENSIONS

UNIT = mm

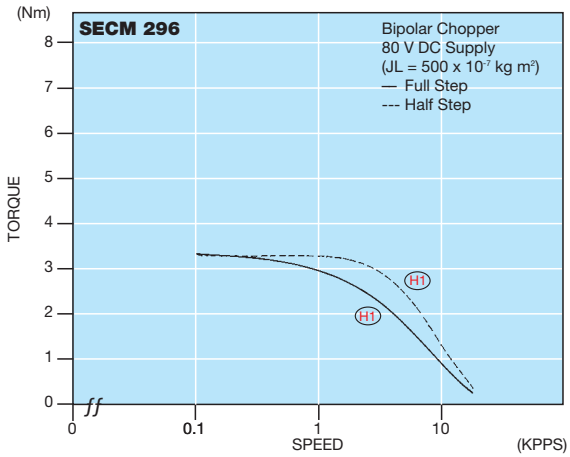

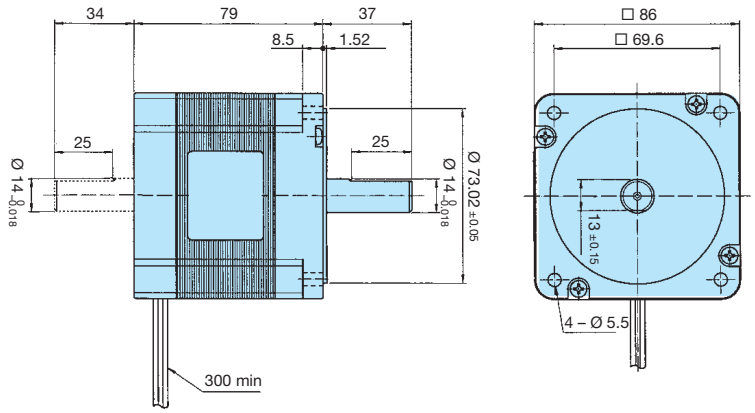

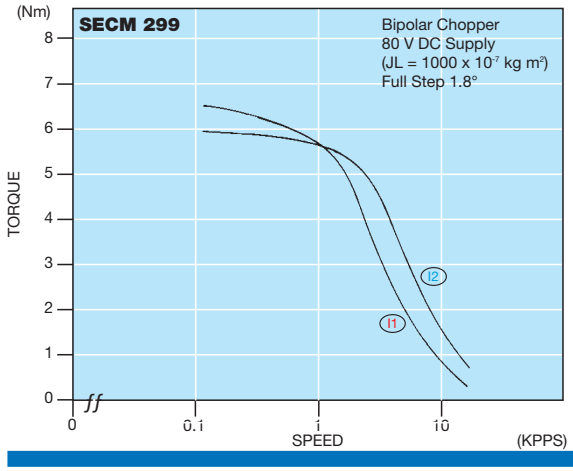

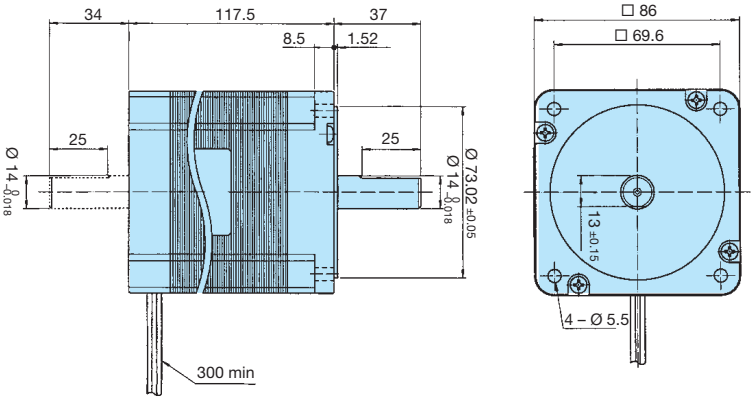

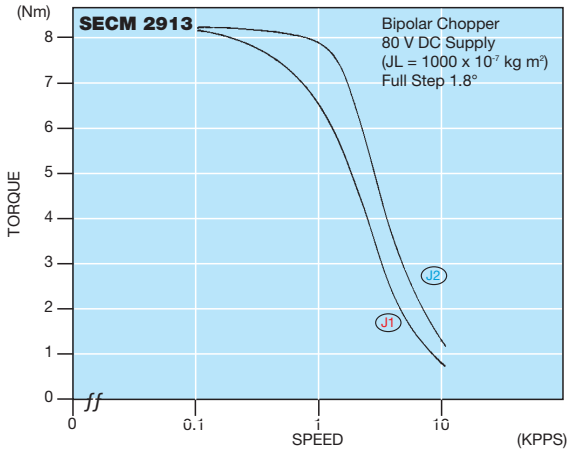

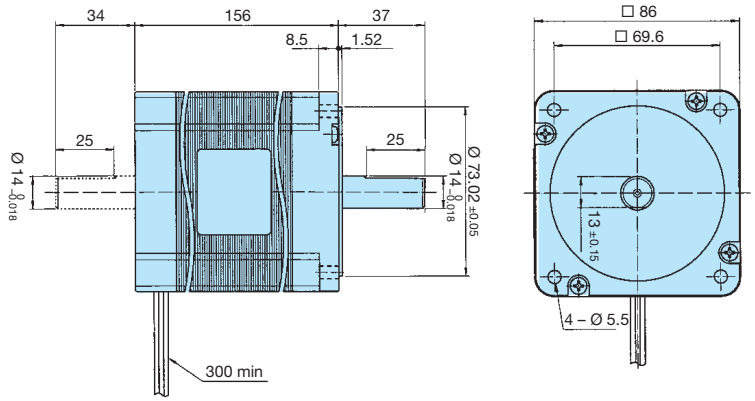

COLOR OF LEAD WIRES

Bipolar (Parallel)

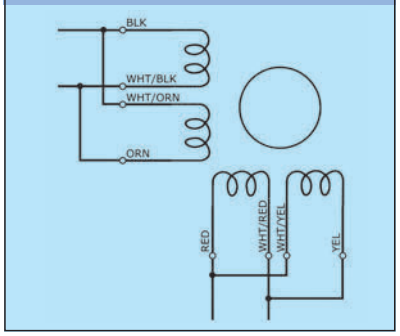

Bipolar (Series)

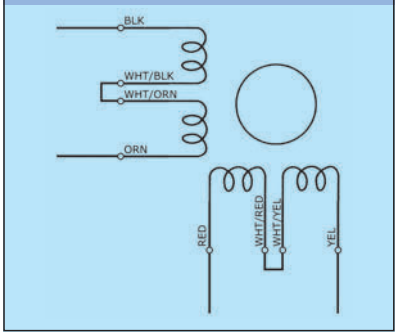
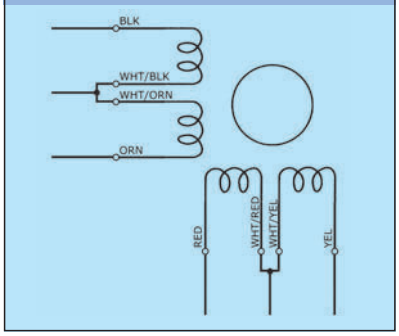
Unipolar