Steppingmotor with Terminalbox:

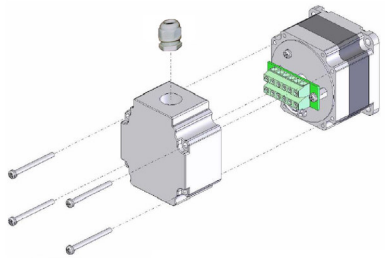

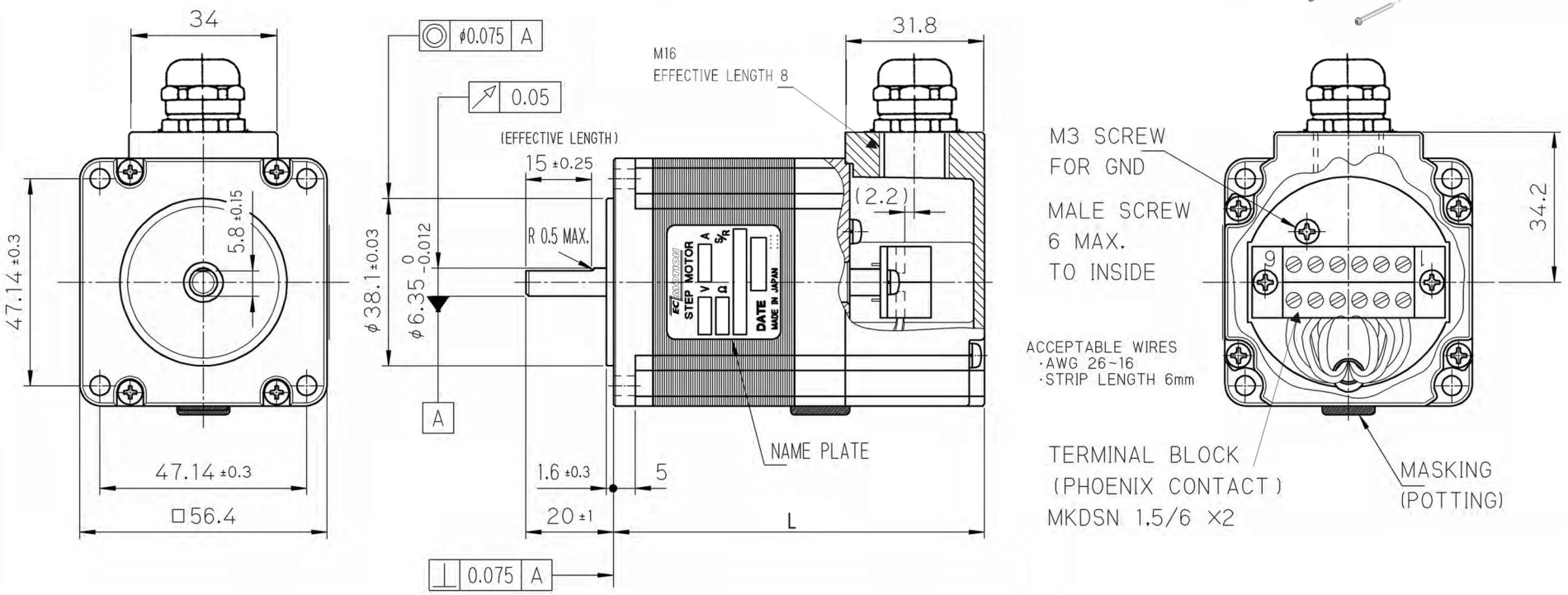

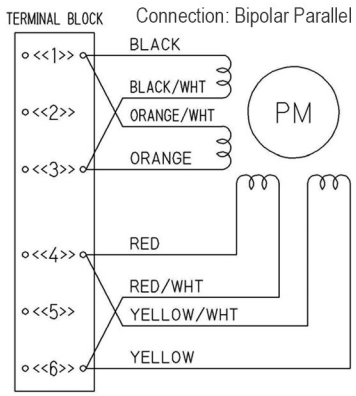

Delivery Status

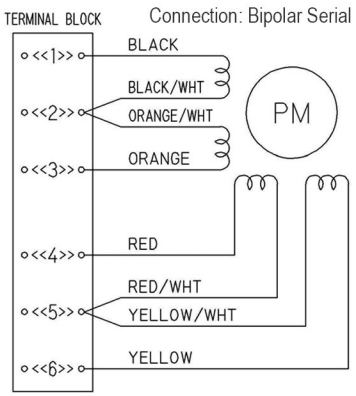

0.9° Full Step Angle:

SECM264M-E2.0A-T	(Holding Torque = 0.55 Nm)	L = 69,5 mm
SECM264M-E3.0A-T	(Holding Torque = 0.55 Nm)	L = 69,5 mm
SECM266M-E2.0A-T	(Holding Torque = 1.25 Nm)	L = 84,5 mm
SECM266M-E3.0A-T	(Holding Torque = 1.25 Nm)	L = 84,5 mm
SECM268M-E2.0A-T	(Holding Torque = 1.95 Nm)	L = 106,5 mm
SECM268M-E2.4A-T	(Holding Torque = 1.95 Nm)	L = 106,5 mm
SECM268M-E3.0A-T	(Holding Torque = 1.95 Nm)	L = 106,5 mm

EC MOTION

Glockensprung (neu) 8
41812 Erkelenz
Tel.: +49-2431-94206-0
www.ec-motion.de - info@ec-motion.de

SECM264M / SECM266M / SECM268M

2-Phase-Step Motor with Terminal Box

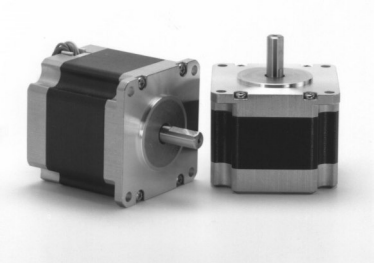

SECM268M... Series

2-Phase-Stepping Motor
[0,9° High-Torque-Version]

Model A = Single Shaft B = Double Shaft	● Bipolar Parallel				● Bipolar Serial				● Unipolar				Torque Speed-curve
	Holding Torque [Nm]	Current/ Phase [A]	Resistance/ Phase [Ohm]	Inductance/ Phase [mH]	Holding Torque [Nm]	Current/ Phase [A]	Resistance/ Phase [Ohm]	Inductance/ Phase [mH]	Holding Torque [Nm]	Current/ Phase [A]	Resistance/ Phase [Ohm]	Inductance/ Phase [mH]	
SECM268M-E2.0 (A/B)	1.95	2.8	1.15	7.8	1.95	1.4	4.6	31.2	1.45	2.0	2.3	7.8	P1
SECM268M-E2.4 (A/B)	1.95	3.5	0.75	5.0	1.95	1.75	3.0	20.0	1.45	2.45	1.5	5.0	P2
SECM268M-E3.0 (A/B)	1.95	4.2	0.5*	3.5	1.95	2.1	2.0*	14.0	1.45	3.0	1.0*	3.5	P3

Number of Leads	Weight of Motor	Size Lenght	Rotor Inertia
8	1.0 kg	56.4 x 56.4 x 76 mm	520 x 10^{-7} kgm²

Resistance / Phase (Ω) = ± 10%, (* ± 15%), Inductance / Phase (mH) = ± 20%

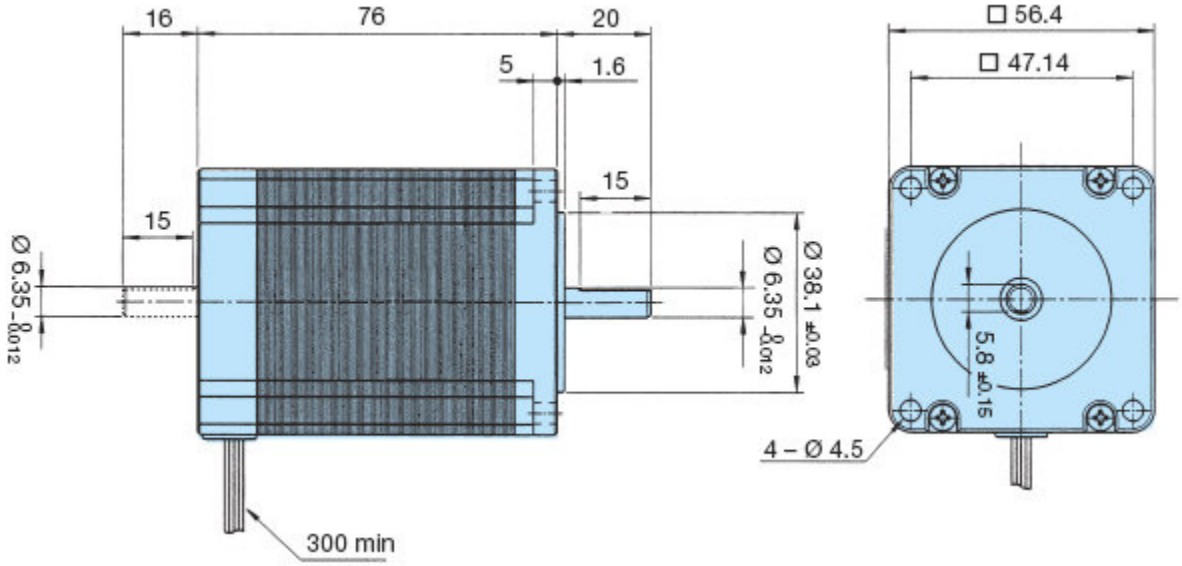

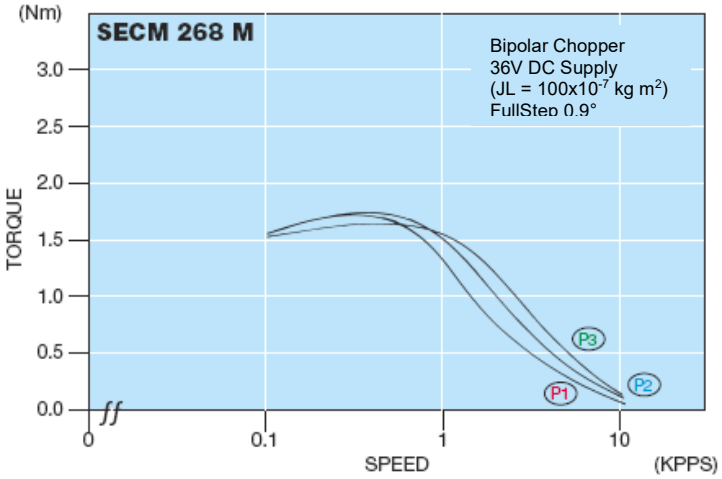

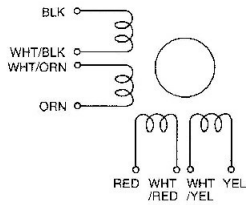

Planetary Gears are optionally available

EC Motion GmbH - Glockensprung (neu) 8 - D-41812 Erkelenz
Tel.: +49-2431-94206-0 - E-Mail: info@ec-motion.de
Internet: www.ec-motion.de

Version 06/21